ExperimentalAvionics.com
2023
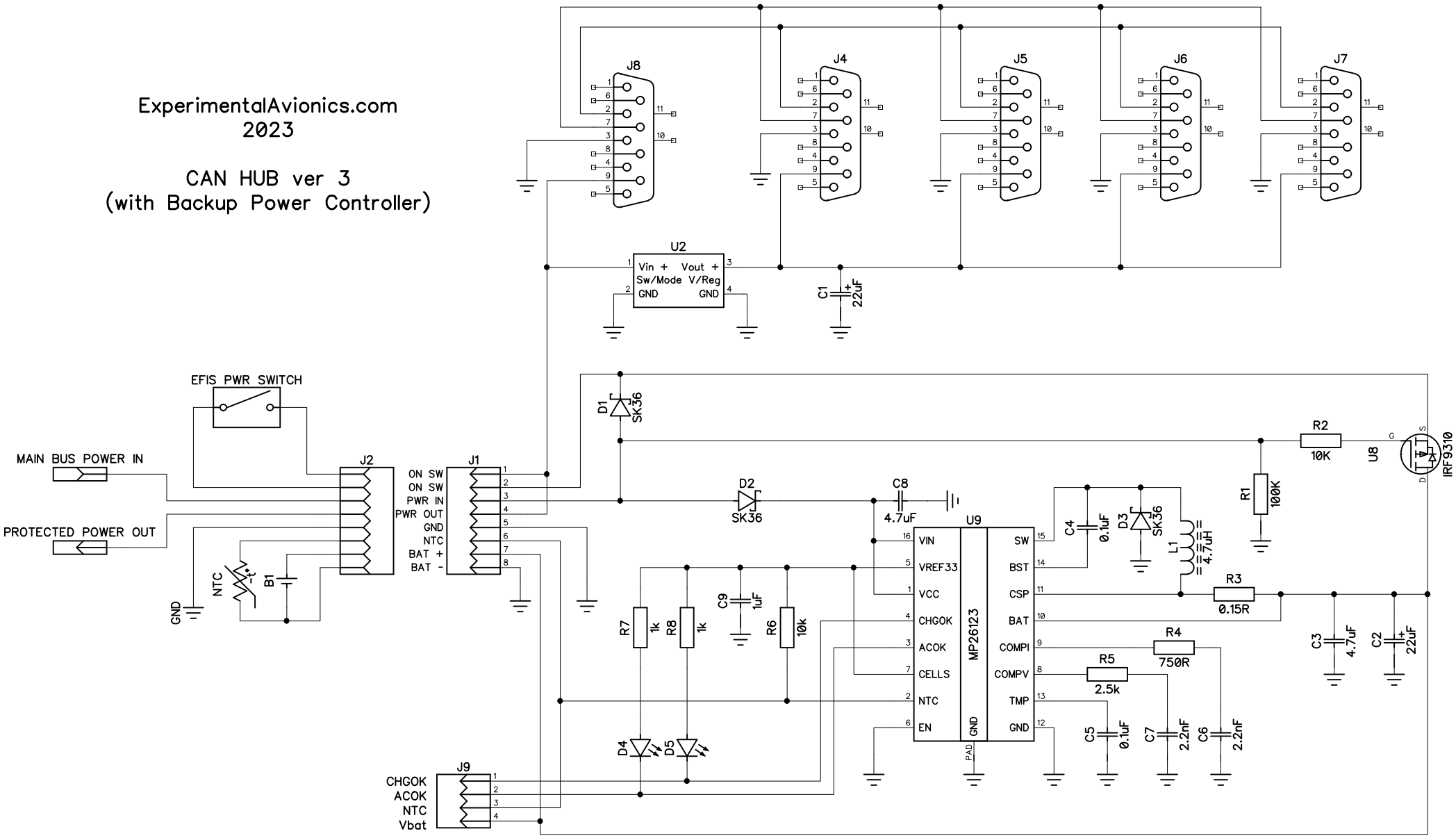
CAN HUB ver 3
(with Backup Power Controller)